P-63B

ENGINE BRAKE PARTS GUIDE

APPLICATION | DETROIT DIESEL SERIES 60

PACBRAKE®

P-63B - P60009 HOUSING ASSEMBLY

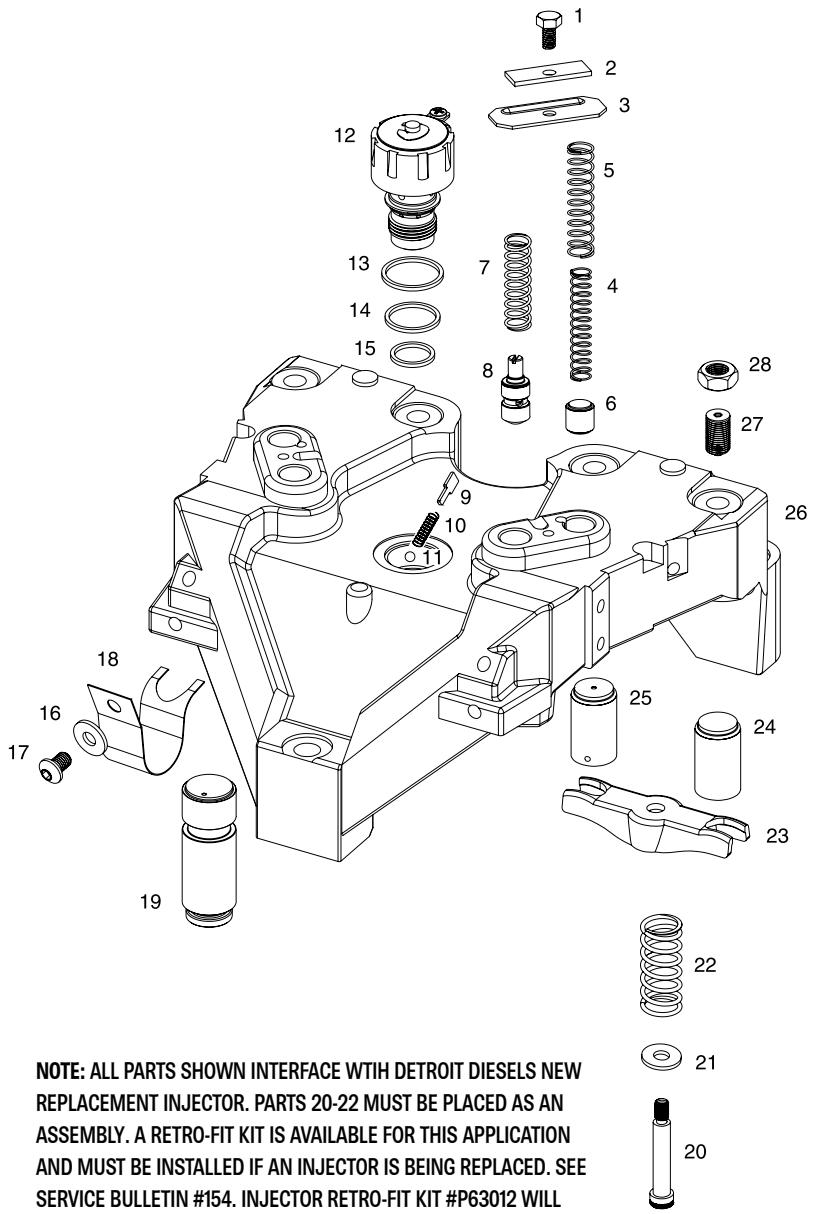

#	PART #	DESCRIPTION	QTY
1	P01492	CAPSCREW-1/4X1/2 HEXHEAD	2
2	P60019	SPRING PLATE	2
3	P34650	CONTROL VALVE COVER	2
4	P60059	ACCUMULATOR SPRING, INNER - YELLOW	2
5	P60061	ACCUMULATOR SPRING, OUTER - RED	2
6	P60060	ACCUMULATOR PISTON	2
7	P60053	CONTROL VALVE SPRING - BLUE	2
8	P01500	CONTROL VALVE	2
9	P60042	BALL CHECK RETAINER	1
10	P60041	BALL CHECK SPRING	1
11	P60039	BALL CHECK	1
12	P04205	SOLENOID-12VOLT	1
13	P01081	SOLENOID SEAL-UPPER	1
14	P01082	SOLENOID SEAL-CENTER	1
15	P01083	SOLENOID SEAL-LOWER	1
16	P38015	PLAIN WASHER	2
17	P03795	CAPSCREW-1/4-20 X 1/2	2
18	P60013	FLAT SPRING	2
19	P60064	MASTER PISTON ORIFICE 7/8" O.D.	2
20	P60096	SHOULDER BOLT - RED	2
21	P80088	SPRING RETAINER WASHER	2
22	P80089	BRIDGE SPRING	2
23	P60070	SLAVE PISTON BRIDGE	2
24*	P60004	OUTER SLAVE PISTON-7/8" O.D.	2
25*	P60029	INNER SLAVE PISTON-7/8" O.D.	2
26	N/A	BARE HOUSING	
27	P40072	PACLASH SCREW (12.7L) (RED) 0.114" PROTRUSION	4
28	P09355	JAMNUT 1/2 NF	4
Ni.	P60009	ENGINE RETARDER HOUSING-P63B	3
Ni.	P60101	TUNE UP KIT-P61/P63/A/B/C (SOLD SEPARATELY)	

**SHORTER SLAVE PISTONS FOR ENGINES WITH RE-MAN CYLINDER HEADS.*

#	PART #	DESCRIPTION	QTY
24	P60065	SLAVE PISTON - OUTER	2 (p/Hsg)
25	P60066	SLAVE PISTON - INNER	2 (p/Hsg)

NOTE: ALL PARTS SHOWN INTERFACE WTIH DETROIT DIESELS NEW REPLACEMENT INJECTOR. PARTS 20-22 MUST BE PLACED AS AN ASSEMBLY. A RETRO-FIT KIT IS AVAILABLE FOR THIS APPLICATION AND MUST BE INSTALLED IF AN INJECTOR IS BEING REPLACED. SEE SERVICE BULLETIN #154. INJECTOR RETRO-FIT KIT #P63012 WILL UPDATE 3 HOUSINGS.

PACBRAKE®

BASE KITS FOR P-63B SUPERCEEDED TO P63C - P63008

#	PART #	DESCRIPTION	QTY
1	P60010	ENGINE RETARDER HOUSING-P61	3
2	P60023	SPACER BAR	2
3	P60050	ATTACHING PARTS GROUP P61/P63	1

ATTACHING GROUP FOR P-61/P-63B - P60050

#	PART #	DESCRIPTION	QTY
1	P60021	CAPSCREW-12PT	9
2	P60022	WASHER	9

OPTION ITEMS FOR P-61/P-63B

#	PART #	DESCRIPTION	QTY
1	P12261T	WOBBLE SWITCH & BRACKET GROUP	1
2	P11494	SOLENOID SOCKET	1
3	P60085	HARNESS EXTENSION-COE, DDEC II	1

CONTROL GROUPS FOR P-61/P-63B WITH DDEC II - P60150

#	PART #	DESCRIPTION	QTY
1	P02970	TOGGLE SWITCH ASSEMBLY	1
2	P01304	TOGGLE SWITCH - ON/OFF	1
3	P01305	SWITCH PLATE-OFF	1
4	P01495	CLUTCH SWITCH ASSEMBLY	1
5	P60045	RELAY-12 VOLT CN	1
6	P60100	SELF DRILL & TAP SCREW	1
7	P01300	FUSE HARNESS	1
8	P60014	TIE-STRAP	12
9	P60046	HARNESS-DDEC	1
10	P60047	HARNESS-THRU HEAD	1
11	P60048	HARNESS-UNDER COVER	1
12	P64206	SOLENOID TERMINAL	3

CONTROL GROUPS FOR P-61/P-63B WITH DDEC III/IV - P60155

#	PART #	DESCRIPTION	QTY
1	P02970	TOGGLE SWITCH ASSEMBLY	1
2	P01304	TOGGLE SWITCH - ON/OFF	1
3	P01305	SWITCH PLATE-OFF	1
4	P60014	TYWRAP	12
5	P60048	HARNESS-UNDER COVER	1
6	P60049	JUMPER WIRE-P63	1
7	P60063	HARNESS-THRU HEAD, DDEC III	1
8	P64206	SOLENOID TERMINAL	3
9	M8069	PUSH-ON TERMINAL	3

MOST VEHICLES WITH DDEC III OR DDEC IV ARE PRE-WIRED AT THE VOEM PLANT. IS THE VEHICLE IS NOT PRE-WIRED, CONTACT THE APPROPRIATE VOEM FOR THE CAB HARNESS